Industrial Computing Products and Services

Panel PC's

Industrial PC's

SBC's

Electronic Design

Industrial Displays

dsl

Embedding the future

Why Choose DSL?

- ✓ Lifetime technical support
- ✓ Fully customisable products
- ✓ Product branding (bezel colours + logos)
- ✓ Free pre-installation of OS and software

Our Services

- ✓ Electronic Design
- ✓ Production Management
- ✓ Assembly and test
- ✓ Bespoke BIOS creation

sales@dsl-ltd.co.uk

or call us on +44 (0)1462 675530

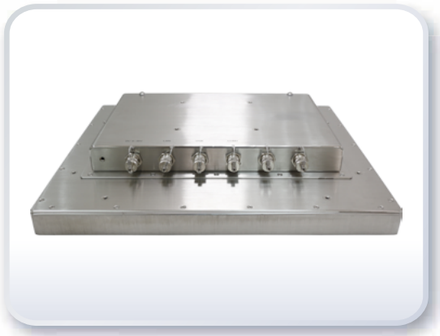

Features

- 15" TFT-LCD
- Intel 6th Gen. Core i5/i3 Processors
- SUS316 Stainless Steel
- Total IP66 Grade with M12 Waterproof Connector
- Variety of IO applications
- Wide range DC 9~36V Power Input
- Support Panel Mount & VESA Mount
- Support Projected Capacitive Touch
- Full Flat Bezel and Fanless Design
- ATEX Zone2, IECEx and C1D2 Certified

Specifications

System	
CPU	Intel 6th Gen. Core i5-6300U/i3-6100U
System Chipset	SoC
Memory	1 x 260-pin SO-DIMM DDR4 2400MHz, up to 16GB

IO Port	
Standard	1 x M12 8pin for LAN with Metal Waterproof CAP 1 x M12 8pin for COM1/RS-232/422/485 (Default RS-232) with Metal Waterproof CAP 1 x M12 8pin for 2 x USB 2.0 with Metal Waterproof CAP 1 x M16 3pin for DC Power with Metal Waterproof CAP
Optional	2 x optional blank M12 connectors with waterproof cap for selecting two from the following options: (1) 2 x M12 8pin for 2 x USB 3.0 (2) 2 x M12 8pin for 1 x USB 3.0 + 2 x USB 2.0 (3) 2 x M12 8pin for 1 x RS-232 + 2 x USB 2.0 (4) 2 x M12 8pin for 1 x USB 3.0 + 1 x RS-232 (5) 1 x M12 8pin for LAN + 1 x M12 12pin for VGA

Storage Space	
Storage	1 x 2.5” SATA HDD or SSD space

Expansion	
Expansion Slot	1 x Mini PCIe Full size slot (Wifi module, mSATA SSD, Either One)

Dispalay	Standard	High Brightness Optional
Display Type	15” Color TFT-LCD	15” Color TFT-LCD
Max. Resolution	1024 x 768	1024 x 768
Max. Color	16.2M	16.2M
Luminance (cd/m^2)	450	1000
View Angle	H: 160/ V:150	H: 160/ V:150
Contrast	800:1	800:1
Backlight Lifetime	50,000 hrs	50,000 hrs

Touch Screen	
Type	Projected Capacitive Touch
Interface	USB
Light Transmission(%)	90%

Power	
Power Input	DC 9~36 V
Power Consumption	MAX: 59.5 W

Dimensions

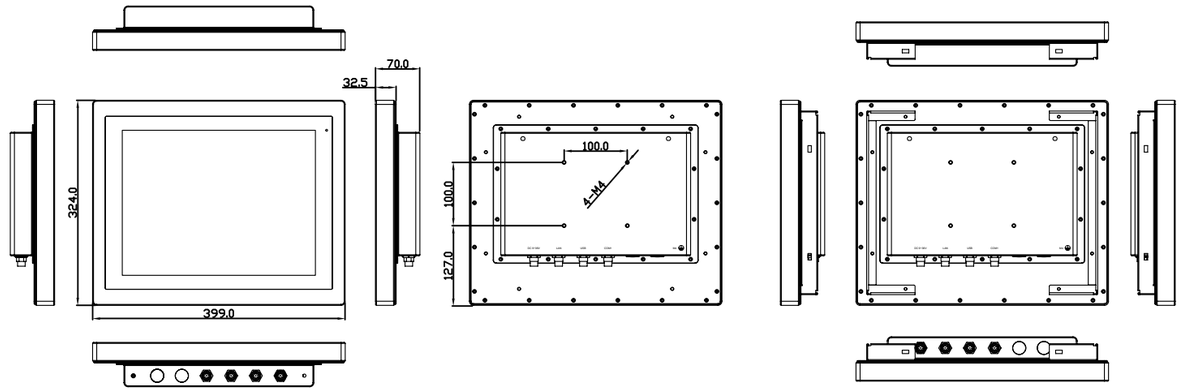

UNIT: mm
Tolerance: ±0.5

Mechanical	
Construction	316 Stainless Steel Chassis
Mounting	VESA Mount 100 x100 / Panel Mount
IP Rating	Total IP66 6 sides
Dimensions	399 x 324 x 70 mm
Net Weight	9.8 Kg

Environmental	
Operating Temperature	-20~60°C
Storage Temperature	-30~70°C
Storage Humidity	10 to 90%@ 40°C, non-condensing
Certificate	Meet CE / FCC Class A ATEx / IECEx / C1D2 Zone 2

Operating System Support
Windows 7 Embedded Standard
Windows Embedded Standard 7
Windows® Embedded 8.1 Pro
Windows® Embedded 8.1 Industry Pro
Windows 10 IOT Enterprise LTSB 2016

V 1.1

All specifications and photos are subject to change without notice.
All specifications and photos are subject to change without notice.
Industrial Panel PC