DATASOUND
-LABORATORIES-

EMBEDDING THE FUTURE

Electronic Design

Panel PC / HMI

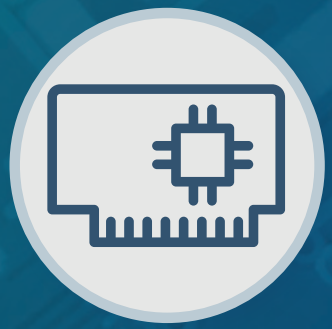

Single Board Computer

Industrial PC

Why choose DSL?

- Over 25 Years Industry Experience
- 5 Years Warranty on all Products
- Evaluation Products Available
- Lifetime Technical Support

Our Services

- Electronic Design
- Production Management
- Assembly and Test
- Bespoke BIOS Creation
- Industrial Embedded PC Solutions

Call us on +44(0)1462 675530

Email us at sales@dsl-ltd.co.uk

5 YEAR WARRANTY
DATASOUND -LABORATORIES-

www.dsl-ltd.co.uk

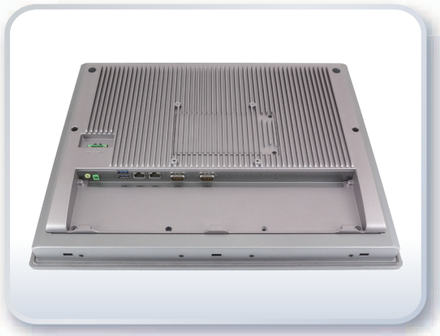

Features

- 17” Industrial Compact Size Panel PC
- Flat front panel touch screen
- Fanless design
- Intel 4th Gen. Core i3 CPU built-in/i5(option)
- Onboard 4GB DDR3L 1600 MHz/8GB(option)
- DC 9~36V wide ranging power input
- IP66 compliant front panel
- Optional projected capacitive touch screen support 7H anti-scratch surface

Specifications

System	
CPU	Onboard Intel 4th Gen. Core i3 CPU Processors/i5(option)
System Chipset	SoC
Memory	Onboard 4GB DDR 3L 1600 MHz/8GB(option)

IO Port	
USB	2 x USB 3.0 type A
Serial/Parallel	1 x DB-9 RS-232/422/485 (Default RS-232), COM1 1 x RS-232 DB-9, COM2
Audio	1 x Audio Line Out
LAN	2 x GbE LAN RJ-45
Power	1 x 3-pin DC Power input terminal 1 x 2-Pin Power Switch
Option	2 x RS-232 DB-9 + 1 x Mini-PCIe slot via TB-528C2ME1 2 x CAN bus via TB-528CAN2 2 x USB 2.0 type A + 1 x RS-232 DB-9 + 1 x Power button via TB-528C1U2P1 2 x USB 2.0 type A + via TB-528U2 UPS Battery 21W/10.8V/1.95Ah(3S1P)

Storage Space	
Movable device	1 x SD Card Slot, up to 32GB
HDD	1 x 2.5" SATA HDD bay for SATA HDD (Easy Accessible)

Expansion	
Expansion Bus	1 x Internal Mini-PCIe slot full size

Display	
Display Type	17” TFT-LCD
Max. Resolution	1280x1024
Max. Color	16.2M
Contrast Ratio	1000 : 1
Luminance (cd/m²)	350
View angle(H°/V°)	H:170° / V:160°
Backlight Lifetime (Hrs)	30,000 hrs

Touch screen - Resistive Touch Window Type	
Interface	USB
Light Transmission(%)	Over 80%

Touch Screen - Projected Capacitive Type	
Interface	USB
Light Transmission(%)	Over 90%

Dimensions

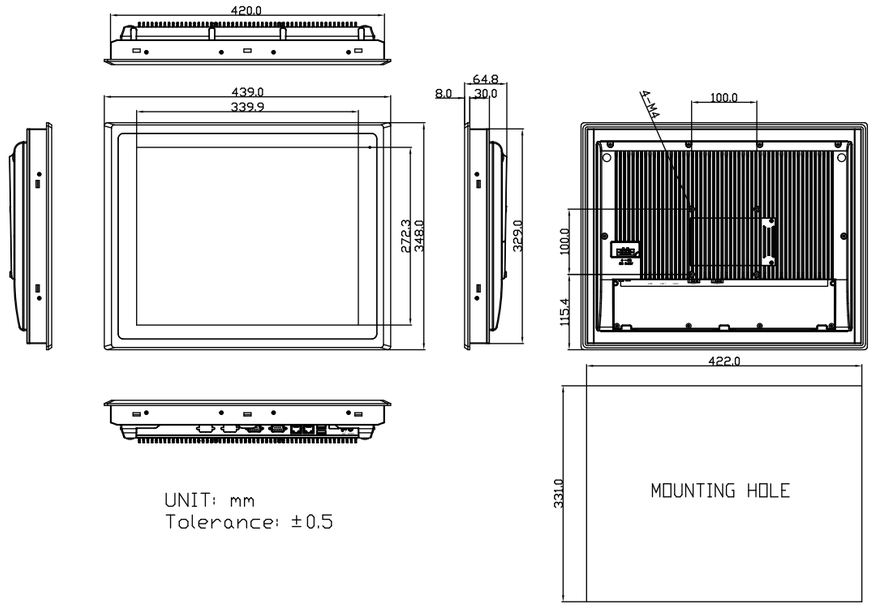

Power	
Power Input	9~36V DC
Power Consumption	MAX: 29.8W (917) / MAX: 30.2W (917P)

Mechanical	
Front Bezel	Flat Bezel design
Front Bezel Metal	Aluminum / Panel Mounting
Rear Panel Metal	Aluminum / VESA 100 x 100
Dimensions (WxHxD)	439mm x 348mm x 64.8mm
IP Rating	IP66 compliant front panel
Net Weight (Kgs)	6.1 Kgs

Environmental	
Operating Temperature	0~50˚C
Storage Temperature	-20~60˚C
Storage Humidity	10 to 90%@ 40˚C, non-condensing
Certificate	CE / FCC Class A / UL

Operating System Support
Windows Embedded Compact 7, Windows Embedded Standard 7, Windows 7 Pro(FES), Windows 7 Ultimate(FES), Windows Embedded 8 Standard, Windows Embedded 8.1 Industry Pro, Windows 10 IoT Enterprise 2015LTSB

Ordering Information	
ARCHMI-917-01	17” SXGA Fanless HMI barebone with Intel Core i3 CPU, 4GB DDR3 RAM, Resistive touch screen, 9~36V DC input with adapter, Aluminum chassis
ARCHMI-917P-01	17” SXGA Fanless HMI barebone with Intel Core i3 CPU, 4GB DDR3 RAM, Projected Capacitive touch screen, 9~36V DC input with adapter, Aluminum chassis

V1.6-0

All specifications and photos are subject to change without notice.
All specifications and photos are subject to change without notice.
HMI Controller