Industrial Computing Products and Services

Panel PC's

Industrial PC's

SBC's

Electronic Design

Industrial Displays

dsl

Embedding the future

Why Choose DSL?

- ✓ Lifetime technical support
- ✓ Fully customisable products
- ✓ Product branding (bezel colours + logos)
- ✓ Free pre-installation of OS and software

Our Services

- ✓ Electronic Design
- ✓ Production Management
- ✓ Assembly and test
- ✓ Bespoke BIOS creation

sales@dsl-ltd.co.uk

or call us on +44 (0)1462 675530

ARCDIS-112APR(H)

12.1” Front Panel IP65 Aluminum Die-casting Display

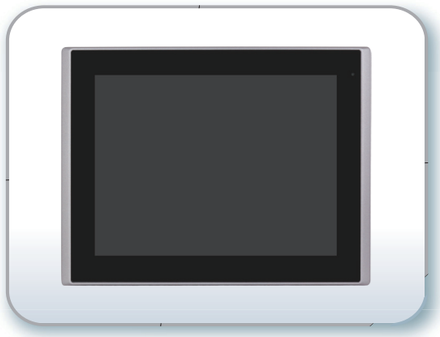

Features

- Industrial Display
- Flat front panel touch screen
- Fanless design
- Wide range DC 9~36V power input
- IP65 compliant front panel
- VGA/DVI/HDMI/DP input
- System power LED light
- High Brightness LCD and Auto Dimming for option

Specifications

I/O Port	
VGA	1
DVI	1
DP	1
HDMI	1
Audio	1 x Audio line-in phone jack
OSD Control Membrane	OSD on rear side On board controller, extendable key pad from connector
Power	1 x 3 pins terminal block for DC power input
Others	1 x USB type A for touch control Optional I/O: 1 x Speaker 1 x RS-232 DB-9 for touch control

Standard LCD		
Display Type	12.1” TFT-LCD	
Max. Resolution	800 x 600	1024 x 768
Max. Color	262K	16.2M
Luminance (cd/m²)	450	500
View Angle	160(H) / 150(V)	160(H) / 140(V)
Contrast Ratio	800:1	700:1
Backlight Lifetime	50,000 hrs	30,000 hrs

High Brightness LCD (option)		
Display Type	12.1” TFT-LCD	
Max. Resolution	800 x 600	1024 x 768
Max. Color	16.2M	16.2M
Luminance (cd/m²)	1000	1000
View Angle	178 (H) / 178 (V)	160(H) / 140(V)
Contrast Ratio	700:1	700:1
Backlight Lifetime	50,000 hrs	50,000 hrs

Power	
Power Input	DC 9~36V
Power Consumption	MAX: 7.9W (112AR) MAX: 14.8W (112AP)

Touch Screen – Resistive Touch Window Type (Default)	
Interface	USB default RS-232 for option
Light Transmission	Over 80%

Touch Screen – Projected Capacitive Type (Option)	
Interface	USB
Light Transmission	Over 90%

Dimension

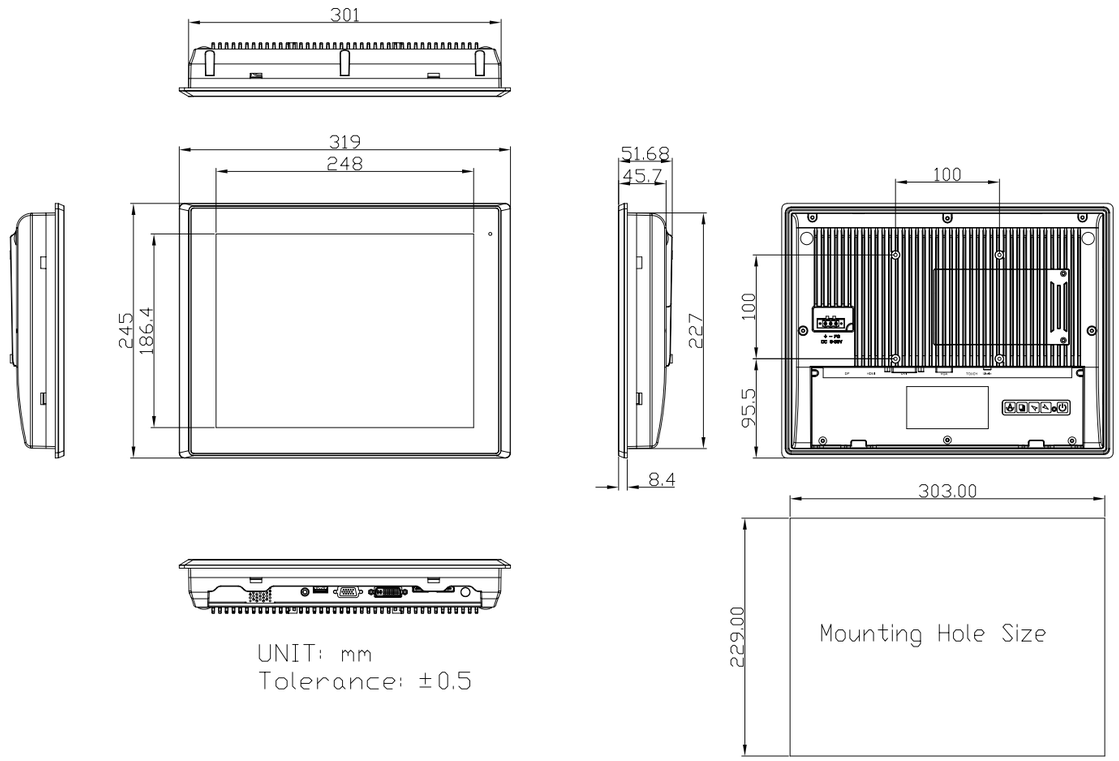

Mechanical	
Construction	Aluminum die-casting chassis
Chassis Color	RAL 9007
Mounting	Panel Mount / VESA Mount 100 x 100
IP Rating	IP65 compliant front panel
Dimension	319 x 245 x 51.6 mm
Net Weight	2.7 Kg

Environmental	
Operating Temperature	0~50 °C
Storage Temperature	-30~70 °C
Storage Humidity	10 to 90%@ 40°C, non-condensing
Certificate	CE/FCC Class A

Ordering Information

ARCDIS-112AR-01	12.1” SVGA FPD Industrial display, Resistive touch window, VGA, DVI, HDMI, and DP input, 5 keys Rear OSD, DC 9~36V power input with adapter, Aluminum Die-casting Chassis
ARCDIS-112AP-01	12.1” SVGA FPD Industrial display, Projected Capacitive touch screen, VGA, DVI, HDMI, and DP input, 5 keys Rear OSD, DC 9~36V power input with adapter, Aluminum Die-casting Chassis

V1.0-1

All specifications and photos are subject to change without notice.
Industrial Display