Industrial Computing Products and Services

Panel PC's

Industrial PC's

SBC's

Electronic Design

Industrial Displays

dsl

Embedding the future

Why Choose DSL?

- ✓ Lifetime technical support
- ✓ Fully customisable products
- ✓ Product branding (bezel colours + logos)
- ✓ Free pre-installation of OS and software

Our Services

- ✓ Electronic Design
- ✓ Production Management
- ✓ Assembly and test
- ✓ Bespoke BIOS creation

sales@dsl-ltd.co.uk

or call us on +44 (0)1462 675530

ViTAM-810P/R/G/(H)

10.1” New Gen. IP66 / IP69K Stainless Steel Panel PC

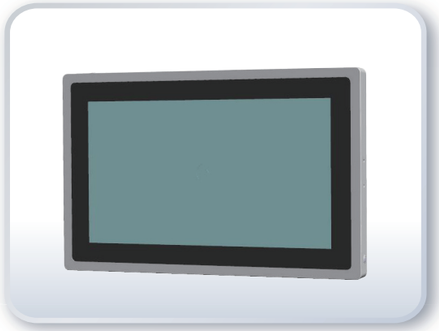

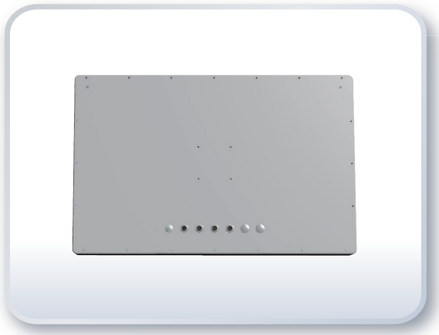

Features

- 10.1” New Generation Stainless Steel Panel PC
- Intel Celeron N2930 1.83GHz Onboard Processor
- True Flat Front Bezel Design and Grade 304 Stainless Steel Enclosure (Grade 316 for Option)
- IP66/IP69K Rated with M12 Connectors
- Support Resistive Touch, Projected Capacitive Touch, and Glass
- Support Wide-Range Temperature -20°~60°C
- Touch on/off Button on the Side Edge for Hygienic Cleaning
- Support Ergonomic Versatile Mounting: Yoke Mounting / Space-saving VESA 75 mm Mounting

Specifications

System	
Processor	Onboard Intel Celeron N2930(1.83GHz) Processor
System Chipset	SoC
System Memory	Onboard 4GB DDR 3L 1600 MHz/8GB(option)

Outside I/O Port- Sandard M12 I/O Connector on the rear	
USB	1 x M12 8-pin for USB 2.0 with waterproof cover and Chain
Serial/Parallel	1 x M12 8pin for COM 1, RS-232/422/485, Default RS-232, with waterproof cover and Chain
LAN	1 x M12 8pin for LAN with waterproof cover and Chain
Power	1 x M12 3pin DC Power with waterproof cover and Chain 1 x Power Switch on the rear side
Others	1 x Touch on/off button on the side
Option	2 x optional blank M12 connectors with waterproof cover and chain for selecting two from the following options: 2 x USB 2.0 via TB-528U2 1 x USB 3.0 via cable 1 x LAN via cable 1 x COM Port via TB-528C1 1 x CAN via TB-528CAN2 1 x POE via TB-528E1U2POE

Storage Space	
HDD	1 x 2.5” HDD / SSD
Movable device	1 x SD slot

Expansion	
Expansion Slot	1 x Mini PCIe slot for WIFI/BT (optional)
RFID Module	RFID module design on the front side (optional)

Display	Standard	High Brightness optional
Display Type	10.1” color TFT LCD	10.1” color TFT LCD
Max. Resolution	1280 x 800	1280 x 800
Max. Color	16.7M	16.7M
Luminance (cd/m^2)	350	1000
View Angle	170(H) / 170(V)	170(H) / 170(V)
Contrast	800:1	800:1
Backlight Lifetime	15,000 Hrs	30,000 Hrs
Option	Optical Boading	Optical Boading

Touch Screen	Resistive Touch	PCT	Glass
TS Control IC	PenMount 6000 on Board	Chip on tail	NA
Interface	USB interface	USB interface	AR/AG(option)
Light Transmission	Over 80%	Over 90%	Over 90%

Dimensions

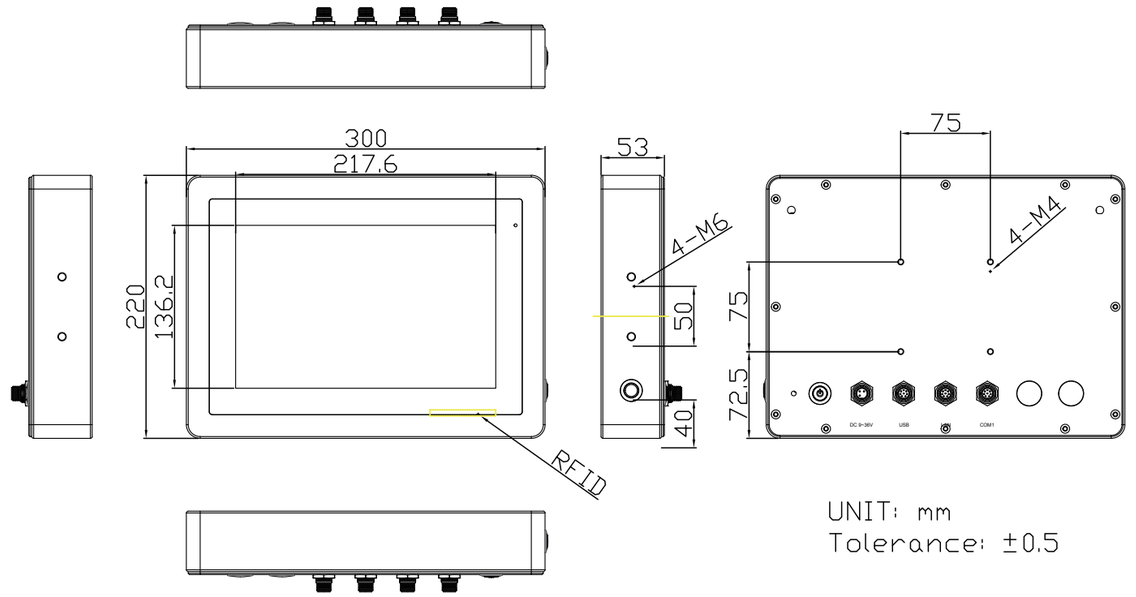

UNIT: mm
Tolerance: ±0.5

Power	
Power input	9~36V DC
Power Consumption	TBD

Mechanical	
Color	304 Stainless Steel Enclosure (Default) 316 Stainless Steel Enclosure (Optional)
Construction	Stainless steel enclosure
Mounting	VESA mount 75 x 75, Yoke mount
IP Rating	IP66/IP69K
Dimension	300 x 220 x 53 mm
Net Weight	TBD

Environmental	
Operating temperature(°C)	-20~60°C
Storage temperature(°C)	-30°C~70°C
Storage humidity	10 to 90% @ 40°C, non-condensing
Certification	CE/FCC class A

Operating System Support
Windows 7 Embedded Enterprise, Windows Embedded Standard 7, Windows Embedded 8.1 Pro, Windows Embedded 8.1 Industry Pro, Windows 10 IoT 2016

Ordering information

ViTAM-810P-01	10.1"/1280x800/S.S./N2930/4G/32GMLCSSD/PCT/9~36V/w ADP
ViTAM-810R-01	10.1"/1280x800/S.S./N2930/4G/32GMLCSSD/RT/9~36V/w ADP
ViTAM-810G-01	10.1"/1280x800/S.S./N2930/4G/32GMLCSSD/GLASS/9~36V/w ADP
ViTAM-810PH-01	10.1"/1280x800/1000NITS/S.S./N2930/4G/32GMLCSSD/PCT/9~36V/w ADP
ViTAM-810RH-01	10.1"/1280x800/1000NITS/S.S./N2930/4G/32GMLCSSD/RT/9~36V/w ADP
ViTAM-810GH-01	10.1"/1280x800/1000NITS/S.S./N2930/4G/32GMLCSSD/GLASS/9~36V/w ADP

All specifications and photos are subject to change without notice.
Industrial Panel PC