Industrial Computing Products and Services

Panel PC's

Industrial PC's

SBC's

Electronic Design

Industrial Displays

dsl

Embedding the future

Why Choose DSL?

- ✓ Lifetime technical support
- ✓ Fully customisable products
- ✓ Product branding (bezel colours + logos)
- ✓ Free pre-installation of OS and software

Our Services

- ✓ Electronic Design
- ✓ Production Management
- ✓ Assembly and test
- ✓ Bespoke BIOS creation

sales@dsl-ltd.co.uk

or call us on +44 (0)1462 675530

ARCHMI-717(P)

17” Intel Atom Low Power D2550, Fanless Industrial Compact Size Panel PC

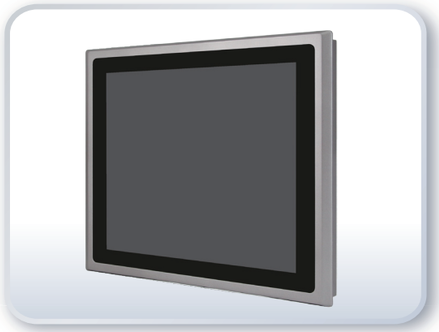

Features

- 17” Industrial Compact Size Panel PC
- Flat front panel touch screen
- Fanless design
- Intel Atom D2550 1.86GHz CPU built-in
- Onboard 4GB DDR III 800 MHz
- 9~36VDC wide-ranging power input
- IP65 compliant front panel
- Optional projected capacitive touchscreen support 7H anti-scratch surface

Specifications

System

CPU	Onboard Intel Atom Cedar View D2550 1.86GHz Dual Core Processors
System Chipset	Intel NM10 Express Chipset
System Memory	Onboard 4GB DDR III 800 MHz

IO Port

USB	2 x USB 2.0 type A
Serial/Parallel	1 x RS-232 DB-9 1 x DB-9 RS-232/422/485 (Default RS-232)
Audio	1 x Audio Line Out
LAN	2 x GbE RJ-45
Power	1 x 3-pin DC Power input terminal 1 x 2-pin power switch
LED light	1 x Power LED Light
Option	2 x RS-232 DB-9 + 1 x Mini-PCIe slot via TB-528C2ME1 2 x CAN bus via TB-528CAN2 2 x USB 2.0 type A + 1 x Mini-PCIe slot + 1 x RS-232 DB-9 via TB-528C1U2P1 2 x USB 2.0 type A + via TB-528U2

Storage Space

HDD	1 x 2.5" SATA HDD bay for SATA HDD (Easy Accessible)
Movable device	1 x SD card slot, up to 32GB

Display

Display Type	17” TFT-LCD
Max. Resolution	1280 x 1024
Max. Color	16.2M
Luminance (cd/m²)	350
Contrast Ratio	1000:1
View angle(H°/V°)	H:170° / V:160°
Backlight Lifetime	30,000 (hrs)

Touch screen

Type	Resistive Touch / Projected Capacitive Touch (for P model)
Interface	USB
Light Transmission(%)	80% / 90% (for P model)

Expansion

Expansion Slot	1 x Internal Mini-PCIe half size

Dimensions

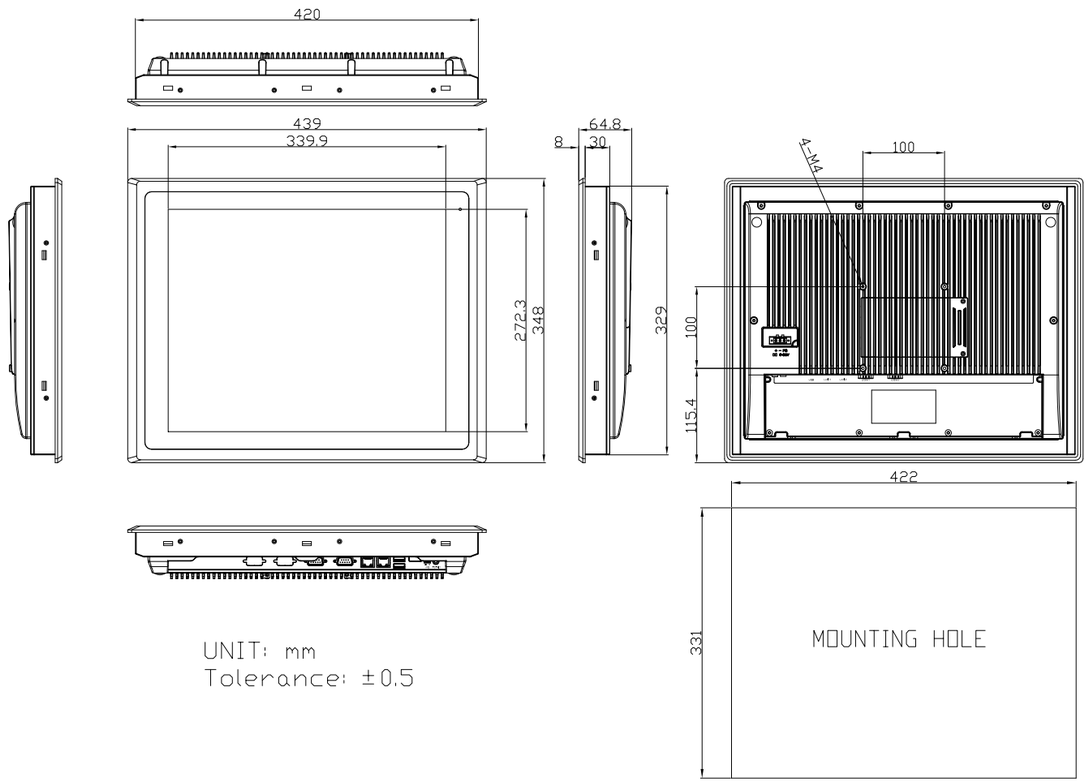

Power

Power Input	9~36V DC
Power Consumption	34.7 W

Mechanical

Construction	Sliver aluminum front bezel and chassis
IP Rating	IP65 front panel
Mounting	Panel mounting, VESA 100 x 100
Dimensions (WxHxD)	439mm x 348mm x 64.8mm
Net Weight (Kgs)	5.1

Environmental

Operating Temperature	0~50˚C
Storage Temperature	-20~60˚C
Storage Humidity	10 to 90%@ 40˚C, non-condensing
Certificate	CE / FCC Class A / UL

Operating System Support

Windows 32-bit XP Pro, Windows 7 32-bit, Windows CE 6.0, Fedora 14

V1.4-0

All specifications and photos are subject to change without notice.
All specifications and photos are subject to change without notice.
HMI Controller