Industrial Computing
Products and Services

Panel PC's

Industrial PC's

SBC's

Industrial Displays

Electronic Design

dsl

Embedding the future

Why Choose DSL?

- ✓ Lifetime technical support
- ✓ Fully customisable products
- ✓ Product branding (bezel colours + company logos)
- ✓ Free pre-installation of OS and your software

Our Services

- ✓ Electronic Design
- ✓ Production Management
- ✓ Assembly and test
- ✓ Bespoke BIOS creation

sales@dsl-ltd.co.uk

or call us on +44 (0)1462 675530

DSL Ltd. | 4 Aylesford Court, Works Road, Letchworth Garden City, Hertfordshire, SG6 1LP

intelligent control on processor

VDX-6318 / VDX-6318-512

DM&P Vortex86DX 800MHz

Tiny CPU Module

with 4S/4USB/VGA/LCD/AUDIO/LAN/2GPIO/PWMx24

256MB DDR2 Onboard

User's Manual

(Revision 1.0A)

Copyright

The information in this manual is subject to change without notice for continuous improvement in the product. All rights are reserved. The manufacturer assumes no responsibility for any inaccuracies that may be contained in this document. And makes no commitment to update or to keep current the information contained in this manual.

No part of this manual may be reproduced, copied, translated or transmitted, in whole or in part, in any form or by any means without the prior written permission of the ICOP Technology Inc..

©Copyright 2009 ICOP Technology Inc.
Manual No. IUM6318000-01 Ver.1.0A September, 2009

Trademarks Acknowledgment

Vortex86DX™ is the registered trademark of ICOP Technology Inc.

Other brand names or product names appearing in this document are the properties and registered trademarks of their respective owners. All names mentioned herewith are served for identification purpose only.

Table of Contents

Table of Contents iii
Chapter 1 Introduction 1
1.1 Packing List 1
1.2 Product Description 2
1.3 Specifications 3
1.4 Board Dimension 4

Chapter 2 Installation 5
2.1 Board Outline 5
2.2 Connectors & Jumpers Location 6
2.3 Connectors & Jumpers Summary 8
2.4 Pin Assignments & Jumper Settings 9
2.5 System Mapping 16
2.6 Watchdog Timer 19
2.7 GPIO 20
2.8 SPI flash 21
2.9 PWM 22
3.0 IDE to SD 23

Chapter 3 Driver Installation 24

Appendix 25
A. TFT Flat Panel Data Output 25
B. TFT Flat Panel Support List 26
C. LVDS Flat Panel Support List 28
D. Flat Panel Wiring and Lighting 29
E. TCP/IP library for DOS real mode 30
F. BIOS Default Setting 31

Warranty 32

Chapter 1

Introduction

1.1 Packing List

Product Name	Package
VDX-6318 & VDX-6318-512	• Embedded Vortex86DX CPU All-in-One Board • Manual & Drivers CD x 1 • RS232 cable x 4 • IDE cable x 1 • USB cable x 2 (USB port x 2) • VGA cable x 1 • GPIO cable x2 • AUDIO Line x2 • PS/2 Mouse cable x 1 • PS/2 Keyboard cable x 1

1.2 Product Description

The VDX-6318 family of low-power x86 embedded controller is designed to meet Tiny specification, and integrated with the following features.

- 800MHz Vortex86DX System-On-Chip
- 256/ 512MB DDR2 system memory
- VGA, TFT LCD support up to 1280x1024 resolution
- Enhanced IDE (UltraDMA-100/66/33)
- 10/100Mbps Ethernet
- 4 USB 2.0 (host)
- Up to 4 serial ports
- 16-bit GPIO x 2
- Audio
- 2 watchdog timer
- PWM 24~32 channels
- JTAG interface
- AMI BIOS
- 4MB SPI flash
- Single voltage +5V DC
- Support extended operating temperature range of -20°C to +70°C

The VDX-6318 Tiny family of embedded controller is designed with backward compatibility in mind, to provide migration path for projects facing end-of-life challenges with their existing x86 based Tiny controller. The VDX-6318 family of controller is designed as a plug in replacement, with backward compatibility to support legacy software to help extend existing product life cycle without heavy re-engineering.

VDX-6318 is suitable for broad range of data-acquisition, Industrial automation, Process control, Automotive controller, AVL, Intelligent Vehicle management devic,Medical device, Human machine interface, Robotics, machinery control And more…application that required small footprint, low-power and low-cost hardware with open industry standard such as Tiny.

1.3 Specifications

Features	VDX-6318
CPU	DM&P SoC CPU Vortex86DX- 800MHz Real Time Clock with Lithium Battery Backup
Cache	L1:16K I-Cache, 16K D-Cache L2:128KB Cache
BIOS	AMI BIOS
System Memory	256/ 512MB DDR2 Onboard
Watchdog Timer	Software programmable from 30.5 us to 512 seconds x2 sets(Watchdog 1 fully compatible with M6117D)
VGA	XGI Volari Z9s Chipset VGA and TFT Flat Panel Interface Support LVDS Flat Panel Interface Support (Optional) Onboard 32MB VGA Memory Support resolution up to 1280 x 1024,16MB colors
LAN	Integrated 10/100M Ethernet
Audio	CM119 USB Audio controller
I /O Interface	• Enhanced IDE port (UltraDMA-100/66/33) x1 • RS-232 port x3 • RS-232/422/485 port x1 (RS485 with Auto Direction) • USB port x4 (USB 2.0 version) • 16-bit GPIO port x2 • 10/100Mbps Ethernet port x1
Connectors	• 2.00 mm ∅ 44-pin box header for IDE x1 • 2.00 mm ∅ 44-pin box header for LCD x 1 • 2.00 mm ∅ 10-pin box header for VGA x1 • 2.00 mm ∅ 20-pin box header for 16-bit GPIO x2 • 2.00 mm ∅ 10-pin box header for RS-232 x4 • 2.00 mm ∅ 10-pin box header for USB x2 • 2.00 mm ∅ 2-pin header for Console Redirection x1 • 2.54 mm ∅ 5-pin box header for keyboard x1 • 2.54 mm ∅ 5-pin header for Mouse x1 • 2.54 mm ∅ 2-pin header for Reset x1 • 1.25 mm ∅ 6-pin Wafer for JTAG x1 • 1.25 mm ∅ 4-pin Wafer for Line-out/MIC-in x2 • External RJ-45 connector for Ethernet x1
Flash Disk Support	• Onboard 4MB SPI Flash Disk (Driver: A) • 44-pin IDE Flash Disk(EmbedDisk 16MB or above) • 44-pin IDE to Micro SD (Optional)
PWM	24~32 Channels
Power Requirement	Single Voltage +5V @ 740mA
Dimension	100mm X 66mm (3.94 x2.6 inches)
Weight	63g
Operating Temperature	-20°C ~ +70°C -40°C ~ +85°C (Optional)

1.4 Board Dimension

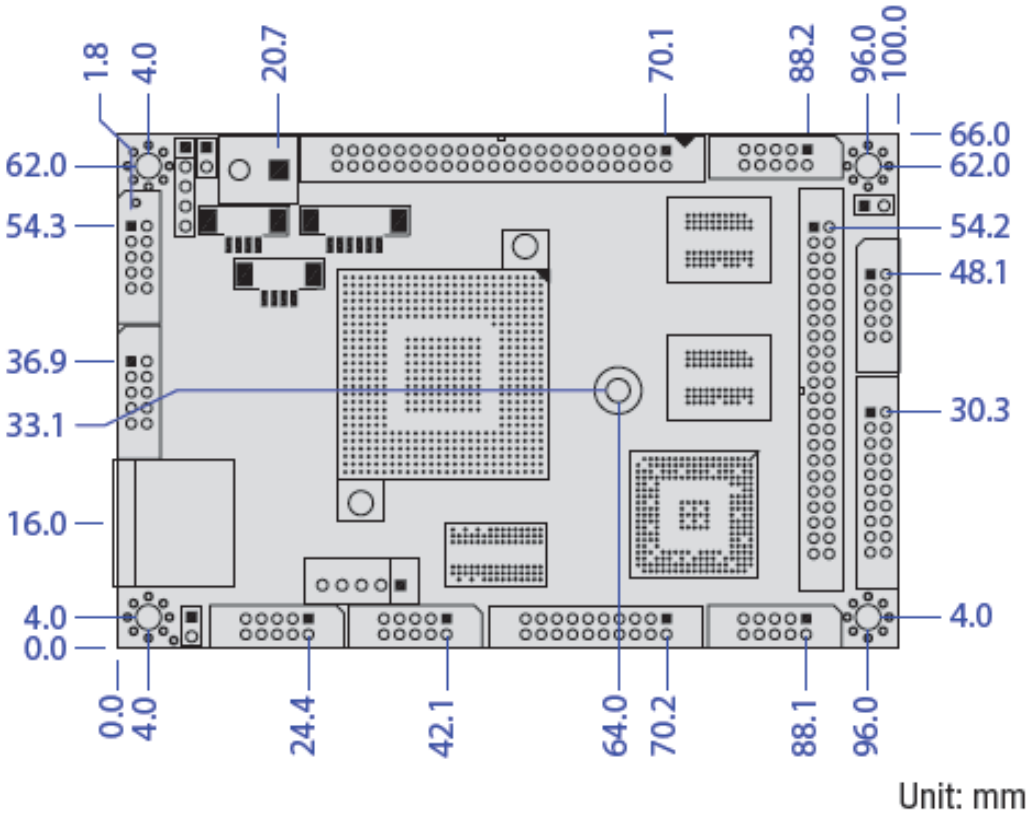

Chapter 2

Installation

2.1 Board Outline

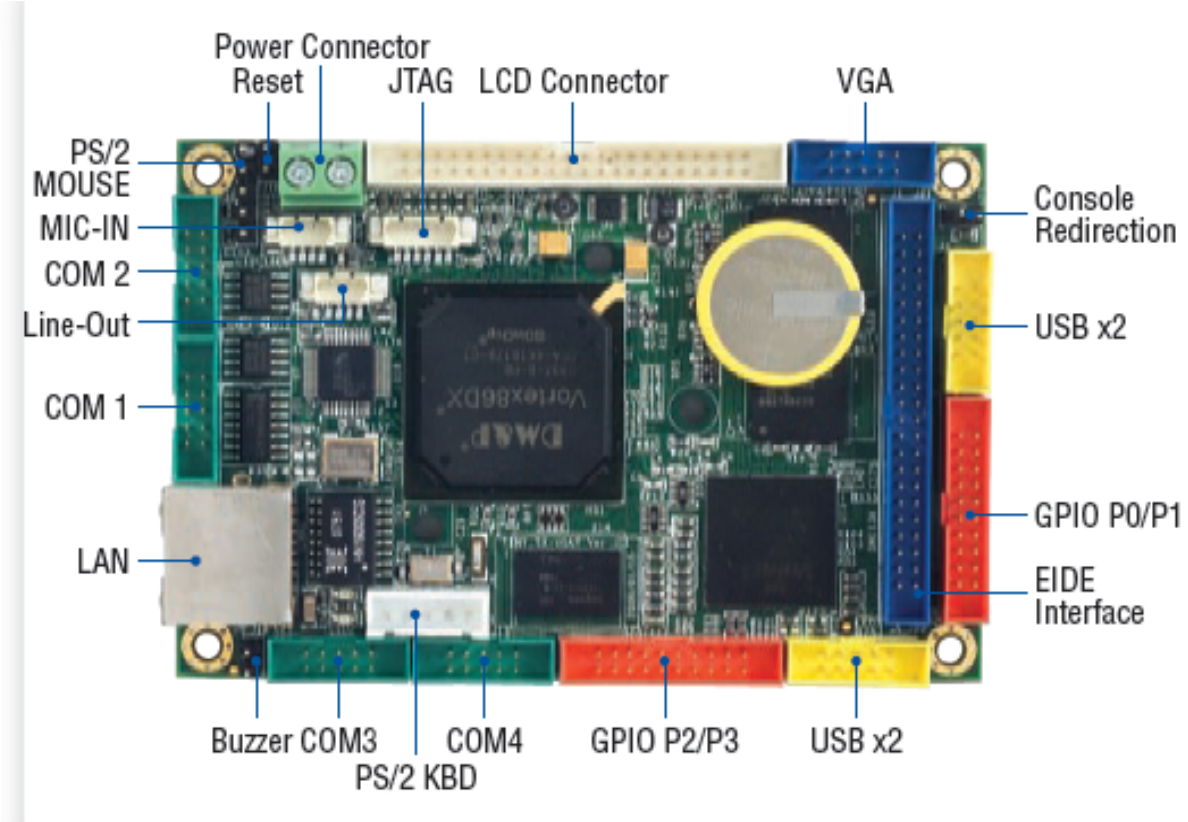

(Note1: USB 3 will be occupied, while you use Audio.)

(Note2: If you Enable 4M SPI flash Disk on the BIOS setting, you cannot use GP30~GP37 Pins)

(Note3: COM2 RS232/422/485 is selected by BIOS setting)

(Note4: VDX-6318-512 is optional)

2.2 Connectors & Jumpers Location

Connectors

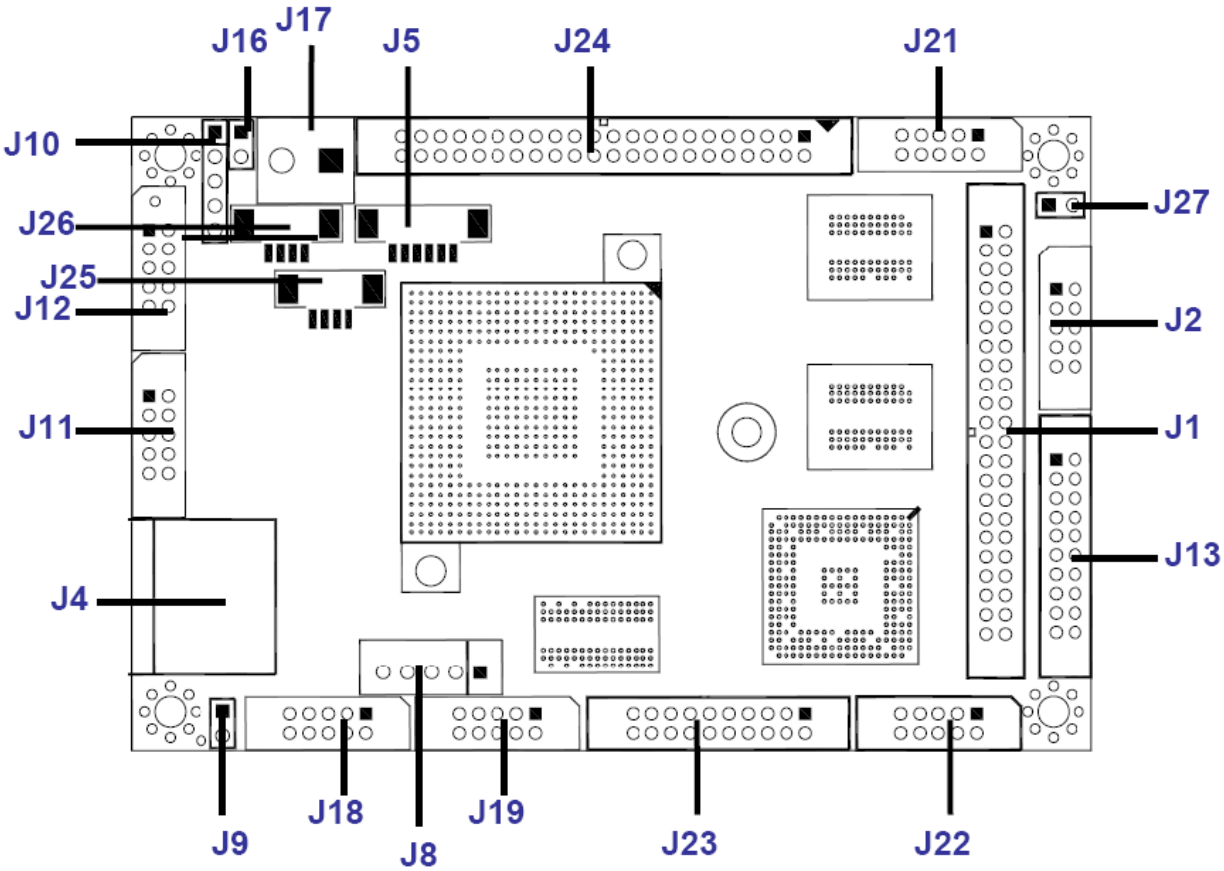

Jumpers & LEDs

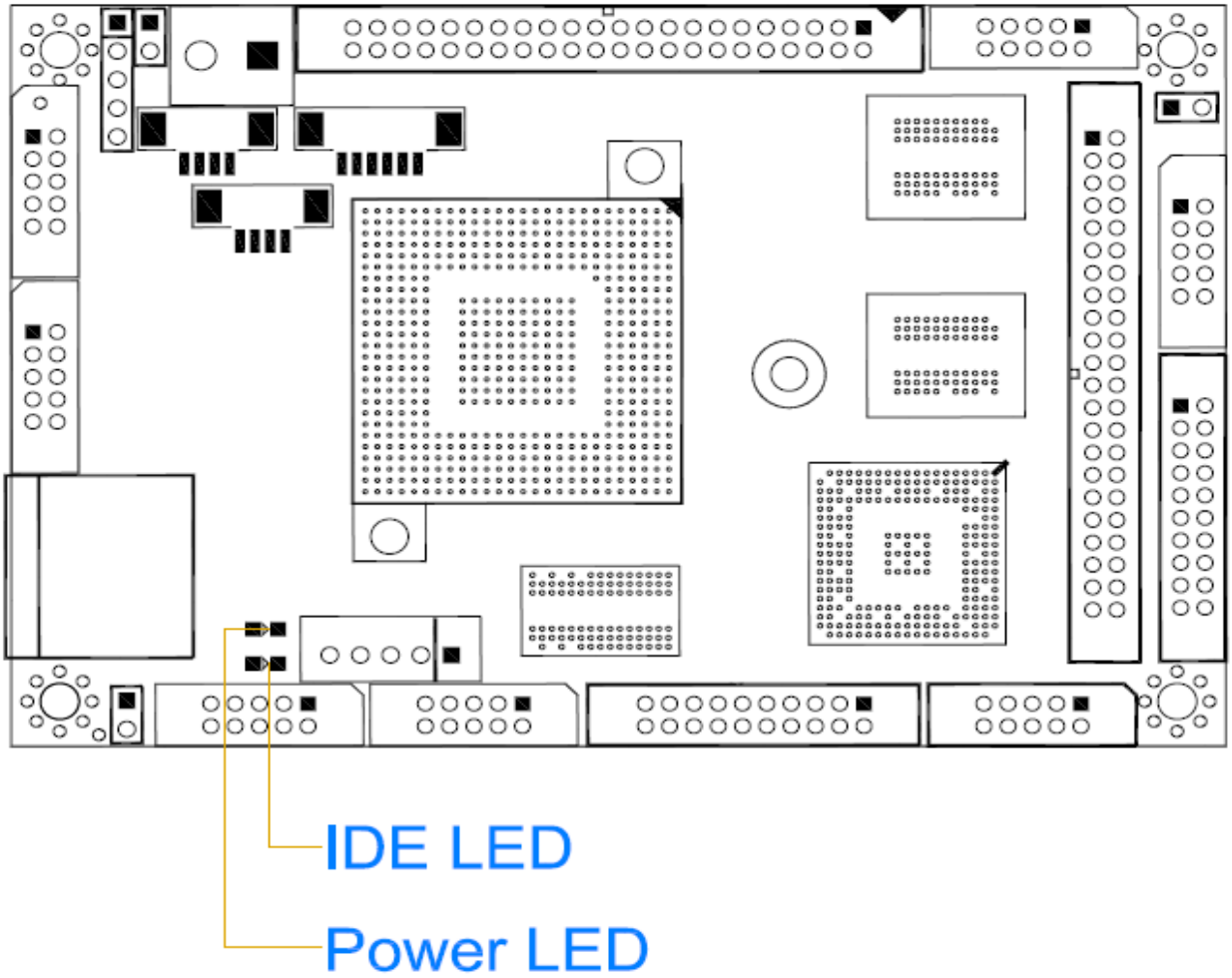

2.3 Connectors & Jumpers Summary

Summary Table			
Nbr	Description	Type of Connections	Pin nbrs.
J1	IDE	Box Header, 2.0∅ ,22x2	44-pin
J2	USB 2/ 3	Box Header,2.0∅ , 5x2	10-pin
J4	10/100Base-T Ethernet LAN	RJ45 Connector	8-pin
J5	JTAG	Wafer, 1.25∅ , 6x1	6-pin
J8	PS/2 Keyboard	Box Header, 2,54∅,1x5	5-pin
J9	Buzzer	Pin Header, 2,54∅,1x2	2-pin
J10	PS/2 Mouse	Pin Header, 2,54∅,1x5	5-pin
J11	COM1	Box Header, 2.0∅ 5x2	10-pin
J12	COM2(RS232/RS485/RS422)	Box Header, 2.0∅ 5x2	10-pin
J13	GPIO (Port 0 / 1 /PWMx16)	Box Header, 2.0∅ ,10x2	20-pin
J16	Reset	Pin Header, 2,54∅,1x2	2-pin
J17	Power Connector	Terminal Block 5.0∅,2x1	2-pin
J18	COM3	Box Header, 2.0∅ 5x2	10-pin
J19	COM4	Box Header, 2.0∅ 5x2	10-pin
J21	VGA	Pin Header, 2.0∅ ,5x2	10-pin
J22	USB 0 / 1	Box Header,2.0∅ , 5x2	10-pin
J23	GPIO Port 2 / 3	Box Header, 2.0∅ ,10x2	20-pin
J24	LCD	Box Header, 2.0∅ ,22x2	44-pin
J25	LINE-OUT	Wafer, 1.25∅ , 4x1	4-pin
J26	MIC-IN	Wafer, 1.25∅ , 4x1	4-pin
J27	Console Redirection	Pin Header, 2,54∅,1x2	2-pin
PWR-LED	Power Active LED (Red)	LED-SMD	
IDE- LED	IDE Active LED (Green)	LED-SMD	

2.4 Pin Assignments & Jumper Settings

J1: IDE (44 Pins)

Pin #	Signal Name	Pin #	Signal Name
1	IDERST	2	GND
3	IDED7	4	IDED8
5	IDED6	6	IDED9
7	IDED5	8	IDED10
9	IDED4	10	IDED11
11	IDED3	12	IDED12
13	IDED2	14	IDED13
15	IDED1	16	IDED14
17	IDED0	18	IDED15
19	GND	20	NC
21	IDEREQ	22	GND
23	IDEIOW	24	GND
25	IDEIOR	26	GND
27	ICHRDY	28	GND
29	IDEACK	30	GND
31	IDEINT	32	NC
33	IDESA1	34	IDECBLID
35	IDESA0	36	IDESA2
37	IDECS-0	38	IDECS1
39	IDELED	40	GND
41	VCC	42	VCC
43	GND	44	NC

J2: USB 2 / 3

Pin #	Signal Name	Pin #	Signal Name
1	VCC	2	VCC
3	LUSBD2-	4	LUSBD3-
5	LUSBD2+	6	LUSBD3+
7	GND	8	GND
9	GGND	10	GGND

Note

USB 3 will be occupied, while you use Audio.

J5: JTAG

Pin #	Signal Name	Pin #	Signal Name
1	VCC	2	GND
3	TCK	4	TDO
5	TDI	6	TMS

J8: PS/2 Keyboard

Pin #	Signal Name	Pin #	Signal Name
1	KBCLK	2	KBDAT
3	NC	4	GND
5	VCC		

J9: Buzzer

Pin #	Signal Name	Pin #	Signal Name
1	Buzzer	2	VCC

J10: PS/2 Mouse

Pin #	Signal Name	Pin #	Signal Name
1	MSCLK	2	MSDATA
3	NC	4	GND
5	VCC		

J11: COM 1

Pin #	Signal Name	Pin #	Signal Name
1	DCD1	2	RXD1
3	TXD1	4	DTR1
5	GND	6	DSR1
7	RTS1	8	CTS1
9	RI1	10	NC

J12: COM2 RS232 / RS422 / RS485 (Change setting by BIOS)

Pin #	Signal Name	Pin #	Signal Name
1	DCD2/ 422TX- / RS485-	2	RXD2 / 422TX+ / RS485+
3	TXD2 / 422RX+	4	DTR2 / 422RX-
5	GND	6	DSR2
7	RTS2	8	CTS2
9	RI2	10	NC

J13: GPIO (Port 0 / Port 1)

Pin #	Signal Name	Pin #	Signal Name
1	GND	2	VCC
3	GP00	4	GP10
5	GP01	6	GP11
7	GP02	8	GP12
9	GP03	10	GP13
11	GP04	12	GP14
13	GP05	14	GP15
15	GP06	16	GP16
17	GP07	18	GP17
19	VCC	20	GND

J16: RESET

Pin #	Signal Name	Pin #	Signal Name
1	Reset	2	GND

J17: Power Connector (Terminal Block 5.0mm)

Pin #	Signal Name
1	+5V
2	GND

J18: COM3

Pin #	Signal Name	Pin #	Signal Name
1	DCD3	2	RXD3
3	TXD3	4	DTR3
5	GND	6	DSR3
7	RTS3	8	CTS3
9	RI3	10	NC

J19: COM4

Pin #	Signal Name	Pin #	Signal Name
1	DCD4	2	RXD4
3	TXD4	4	DTR4
5	GND	6	DSR4
7	RTS4	8	CTS4
9	RI4	10	NC

J21: VGA

Pin #	Signal Name	Pin #	Signal Name
1	R OUT	2	GND
3	G OUT	4	GND
5	B OUT	6	GND
7	HSYNC	8	GND
9	VSYNCD	10	GND

J22: USB 0 / 1

Pin #	Signal Name	Pin #	Signal Name
1	VCC	2	VCC
3	LUSBD0-	4	LUSBD1-
5	LUSBD0+	6	LUSBD1+
7	GND	8	GND
9	GGND	10	GGND

23: GPIO (Port 2 / Port 3)

Pin #	Signal Name	Pin #	Signal Name
1	GND	2	VCC
3	GP20	4	SPICS / GP30
5	GP21	6	SPICLK / GP31
7	GP22	8	SPID0 / GP32
9	GP23	10	SPIDI / GP33
11	GP24	12	GP34
13	GP25	14	GP35
15	GP26	16	GP36
17	GP27	18	GP37
19	VCC	20	GND

Note:

If you Enable 4M SPI flash Disk on the BIOS setting, you cannot use GP30~GP37 Pins.

J24: LCD (DVO) Connector

Pin #	Signal Name	Pin #	Signal Name
1	+3.3V	2	+3.3V
3	LG2	4	LG3
5	LG4	6	LG5
7	NC	8	NC
9	LR0	10	LR1
11	LR2	12	LR3
13	LR4	14	LR5
15	GND	16	NC
17	NC	18	NC
19	NC	20	GND
21	NC	22	NC
23	LB0	24	LB1
25	LB2	26	LB3
27	LB4	28	LB5
29	NC	30	NC
31	LG0	32	LG1
33	GND	34	GND
35	NC	36	LCLK
37	NC	38	LDE
39	NC	40	LHSYNC
41	NC	42	LVSYNC
43	LBACKL	44	LVDDEN

(Please refer to Appendix A, for TFT Flat Panel Data Output)

J25: LINE OUT

Pin #	Signal Name
1	LOUTR
2	GND
3	GND
4	LOUTL

J26: MIC-IN

Pin #	Signal Name
1	MICVREF
2	GND
3	GND
4	MIC-IN

J27: Console Redirection (Pin 1 & Pin 2 short)

Pin #	Signal Name	Pin #	Signal Name
1	Console_Red	2	GND

2.5 System Mapping

System Mapping

Memory Mapping

Address	Description	Usage
0000:0000-9000:FFFF	System RAM	*
A000:0000-A000:FFFF	EGA/VGA Video Memory	*
B000:0000-B000:7FFF	MDA RAM, Hercules graphics display RAM	*
B000:8000-B000:FFFF	CGA display RAM	*
C000:0000-C000:7FFF	EGA/VGA BIOS ROM	*
C000:8000-C000:FFFF	Boot ROM enable.	*
D000:0000-D700:FFFF	Expansion ROM space.	
D800:0000-DB00:FFFF	SPI FLASH Emulation Floppy A Enable	
DC00:0000-DF00:FFFF	Expansion ROM space.	
E000:0000-E000:FFFF	USB Legacy SCSI ROM space.	*
F000:0000-F000:FFFF	Motherboard BIOS	*

I/O Mapping

I/O Address	Owner	Usage
0000h - 000Fh	DMA 8237-1	*
0010h - 0017h	COM 9	*
0018h - 001Fh	Empty	
0020h - 0021h	PIC 8259-1	*
0022h - 0023h	6117D configuration port	*
0024h - 002Dh	Empty	
002Eh - 002Fh	Forward to LPC BUS	*
0030h - 003Fh	Empty	
0040h - 0043h	Timer counter 8254	*
0044h - 0047h	Empty	
0048h - 004Bh	PWM counter 8254	*
004Ch - 004Dh	Empty	
004Eh - 004Fh	Forward to LPC BUS	*
0050h - 005Fh	Empty	
0060h	Keyboard data port	*
0061h	Port B + NMI control port	*
0062h - 0063h	8051 download 4K address counter	*

0064h	Keyboard status port	*
0065h	WatchDog0 reload counter	*
0066h	8051 download 8bit data port	*
0067h	WatchDog1 reload counter	*
0068h - 006Dh	WatchDog1 control register	*
006Eh - 006Fh	Empty	
0070h - 0071h	CMOS RAM port	*
0072h - 0075h	MTBF counter	*
0076h - 0077h	Empty	
0078h - 007Ch	GPIO port 0,1,2,3,4 default setup	*
007Dh - 007Fh	Empty	
0080h - 008Fh	DMA page register	*
0090h - 0091h	Empty	
0092h	System control register	*
0093h - 0097h	Empty	
0098h - 009Ch	GPIO direction control	*
00A0h - 00A1h	PIC 8259-2	*
00A2h - 00BFh	Empty	
00C0h - 00DFh	DMA 8237-2	*
00E0h - 00FFh	Empty	
0100h - 0101h	GPCS1 default setting address	*
0170h - 0177h	IDE1 (IRQ 15)	
01F0h - 01F7h	IDE0 (IRQ 14)	*
0220h - 0227h	COM8 Forward to LPC BUS	
0228h - 022Fh	COM7 Forward to LPC BUS	
0238h - 023Fh	COM6 Forward to LPC BUS	
0278h - 027Fh	Printer port (IRQ 7, DMA 0)	
02E8h - 02EFh	COM4 (IRQ 11)	*
02F8h - 02FFh	COM2 (IRQ 3)	*
0338h - 033Fh	COM5 Forward to LPC BUS	
0376h	IDE1 ATAPI device control write only register	*
03E8h - 03Efh	COM3 (IRQ 10)	*
03F0h - 03F7h	Floppy Disk (IRQ 6, DMA 2)	
03F6h	IDE0 ATAPI device control write only register	*
03F8h - 03FFh	COM1 (IRQ 4)	*
0480h - 048Fh	DMA High page register	*
0490h - 0499h	Instruction counter register	*
04D0h - 04D1h	8259 Edge,/ level control register	*
0CF8h - 0CFFh	PCI configuration port	*
D400h - D4FFh	on board LAN	*
FC00h - FC05h	SPI Flash BIOS control register	*
FC08h - FC0Dh	External SPI BUS control register (output pin configurable GPIO3[0-3])	*

IRQ Mapping

IRQ#	Description	Usage
IRQ0	System Timer	*
IRQ1	Keyboard Controller	*
IRQ2	Cascade for IRQ8 - 15	
IRQ3	Serial Port 2	*
IRQ4	Serial Port 1	*
IRQ5	USB / Ethernet 10/100M LAN	*
IRQ6	USB	*
IRQ7	Unassigned	
IRQ8	Real Time Clock	*
IRQ9	Serial Port 9	*
IRQ10	Serial Port 3	*
IRQ11	Serial Port 4	*
IRQ12	Mouse	*
IRQ13	Math Coprocessor	*
IRQ14	Hard Disk Controller#1	*
IRQ15	USB	*

DMA Mapping

DMA#	Description	Usage
DMA0		
DMA1		
DMA2	Floppy Disk Controller	
DMA3		
DMA5		
DMA6		
DMA7		

2.6 Watchdog Timer

There are two watchdog timers in Vortex86SX/DX CPU. One is compatible with M6117D watchdog timer and the other is new. The M6117D compatible watchdog timer is called WDT0 and new one is called WDT1.

We also provide DOS, Linux and WinCE example for your reference. For more technical support, please visit: http://www.dmp.com.tw/tech or download the PDF file: http://www.dmp.com.tw/tech/vortex86dx/

2.7 GPIO (General Purpose Input / Output)

40 GPIO pins are provided by the Vortex86SX/DX for general usage in the system. All GPIO pins are independent and can be configured as inputs or outputs, with or without pull-up/pull-down resistors.

We also offer DOS, Linux and WinCE example for your reference. For more technical support, please visit: http://www.dmp.com.tw/tech or download the PDF file: http://www.dmp.com.tw/tech/vortex86dx/

2.8 SPI flash (Serial Peripheral Interface)

As SPI Flash (Serial Peripheral Interface) offers many benefits including: reduced controller pin count, smaller and simpler PCBs, reduced switching noise, less power consumption, and lower system cost

Many of users may consider using a formatted SPI flash to boot for the system or emulate SPI flash as Floppy (A: Driver or B: Driver). Then you must know how to set for this condition in CMOS Setup and boot up under DOS 6.22, X-DOS, DR-DOS and Free DOS.

For more technical support, please visit: http://www.dmp.com.tw/tech or download the PDF file: http://www.dmp.com.tw/tech/vortex86dx/

2.9 PWM (Pulse-width modulation)

Pulse-width modulation (PWM) of a signal or power source involves the modulation of its duty cycle, to either convey information over a communications channel or control the amount of power sent to a load.

The popular applications of pulse width modulation are in speed control of electric motors, volume control of Class D audio amplifiers or brightness control of light sources and many other power electronics applications.

The Vortex86DX SoC integrated 32 channels of PWM interface enabling the Automation, robotic industry to a New Age x86 SoC platform and we also offer the sample code of PWM which will guide the engineer to control the PWM functionality smoothly.

For more inquire of this sample code that please contact our sales team or mail to:
info@icop.com.tw

3.0 IDE to SD (Micro-SD)

Vortex86DX SoC also built-in simulation circuit to adapt SD to IDE in order to allow your system to recognize Micro-SD card as C: or D: Driver

SD-1917: 44 pins IDE to SD Adapter is an ideal solution for industrial PC or embedded system and 44 pins IDE to SD Adapter can be easily installed on all Vortex86DX-63xx CPU boards. You or your customers just do the BIOS setting and use SD-1917 to connect IDE connector of Vortex86DX-63xx directly.

For further inquiries of SD-1917, please contact ICOP sales team or mail to: info@icop.com.tw for your request.

<BIOS setting>

- Get into the BIOS setup Utility
- Choose Primary IDE Pin Select: SD card
- Press “F10” to Save configuration changes and exit setup

SD-1917

SD-1917: http://www.icop.com.tw/pddetail.aspx?id=125&pid=4

Chapter 3

Driver Installation

VGA

The Vortex86DX processor also use external Display chip ""Volari™ Z9s" which is an ultra low powered graphics chipset with total power consumption at around 1-1.5 W. It is capable in providing VGA display output upto 1600x1200. With DVO interface, developers could easily connect flat Panel to support TFT and LVDS output.

LAN

The Vortex86DX processor also integrated 10/100Mbps Ethernet controller that supports both 10/100BASE-T and allows direct connection to your 10/100Mbps Ethernet based Local Area Network for full interaction with local servers, wide area networks such as the Internet.
I/O and IRQ settings can be done by software with the supplied utility software, or it can be set for Plug and Play compatibility. The controller supports: Half / Full-Duplex Ethernet function to double channel bandwidth, auto media detection.

Operating system support

The Vortex86DX-6318 Tiny CPU board provides the VGA and LAN drivers for DOS 6.22 Windows CE 5.0, CE 6.0, Windows 98, Windows XP Professional, Windows Embedded standard (XPE) and Windows 2000.

Please get the drivers from the Driver CD which attached with the standard packing of Vortex86DX-6318 board or please get it from DMP official website:
http://www.dmp.com.tw/tech/vortex86dx/

Vortex86DX-6318 also supports most of the popular Linux distributions, for more detail information, please visit DMP official website: http://www.dmp.com.tw/tech/vortex86dx/
.

Appendix

A. TFT Flat Panel Data Output

Vortex86 SX/DX Pin Name		TFT LCD 18 / 24 Bits
1	VCC3 (3.3V)	VDD
2	VCC3 (3.3V)	VDD
3	LG2	G2
4	LG3	G3
5	LG4	G4
6	LG5	G5
7	NC	/
8	NC	/
9	LR0	R0
10	LR1	R1
11	LR2	R2
12	LR3	R3
13	LR4	R4
14	LR5	R5
15	GND	VSS
16	NC	/
17	NC	/
18	NC	/
19	NC	/
20	GND	VSS
21	NC	/
22	NC	/
23	LB0	B0
24	LB1	B1
25	LB2	B2
26	LB3	B3
27	LB4	B4
28	LB5	B5
29	NC	/
30	NC	/
31	LG0	G0
32	LG1	G1
33	GND	VSS
34	GND	VSS
35	NC	/
36	LCLK	XCLK
37	NC	/
38	LDE	DEN
39	NC	/
40	LHSYNC	HSYNC
41	NC	/
42	LVSYNC	VSYNC
43	LBACKL	/
44	LVDDEN	VDDEN

B.TFT Flat Panel Support List

Size	Brand	Resolution	Model No.
5.7”	Data image	320x240	FG050701DSSWBG01
5.7”	Optrex	320x240	55264GD057J-FW-ABN
5.7”	TOSHIBA	320x240	LTA057A343F
5.7”	Sharp	320x240 (QVGA / VGA)	LQ057Q3DC02
5.7”	Kyocera	320x240 (QVGA / VGA)	TCG057QV1AC-G10
5.7”	PVI	320x240 (QVGA / VGA)	PD057VU4 /U5
5.7”	Data image	640x480	FG050710DSSWJG01/DG01
5.7”	Ampire	640x480	AM-640480GTMQW-T00H
5.7”	URT	640x480	UMSH-8004MD-T
5.7”	Sharp	640x480	LQ057V3DG01
5.7”	CPT	640x480	CLAA057VA01
6.4”	PVI	640x480	V16C6448AC
6.4”	LG-PHILIPS	640x480	LB064V02
6.4”	PVI	640x480	PD064VT2 /VT4 /VT5
6.4”	Sharp	640x480	LQ064V3DG01
7”	AUO	800x480	C070VW02V0
7”	Data image	800x480	FG0700A0DSSWBG01
7”	LG-PHILIPS	800x480 (TFT 24 bits)	LB070WV1
7”	HITACHI	800x480	TX18D57VM2BAA
7”	Samsung	800x480	LMS700KF05
7”	PVI	800x480	PM070WL4
7”	URT	800x480	UMSH-8173MD-1T
7”	CHI HSIN	800x480	LW700AT9309
8”	Sharp	640x480	LQ080V3DG01

Size	Brand	Resolution	Model No.
8”	AUO	800x600 (TFT 24bits)	A080SN01 V0
8.4”	Sharp	800x600	LQ084S3DG01
10.4”	PVI	640x480	PD104VT1/VT2
10.4”	NEC	640x480	NL6448AC33-18
10.4”	NEC	640x480	NL6448AC33-29
10.4”	NEC	640x480	NL6448BC33-59
10.4”	Sharp	640x480	LQ104V1DG51/DG61
10.4”	Sharp	640x480	LQ10d368
11”	Sharp	800x480	LQ110Y3DG01
12.1”	NEC	800x600	NL8060BC31-01

C. LVDS Flat Panel Support List

If you would like to use LVDS Flat Panel with Vortex86SX / Vortex86DX series, please contact our regional sales to get ICOP-0096 information or visit ICOP website:
http://www.icop.com.tw/pddetail.aspx?id=65&pid=4

ICOP–0096: 18-bit TFT to LVDS converter and Cable-LVDS-30: LVDS Cable 30cm

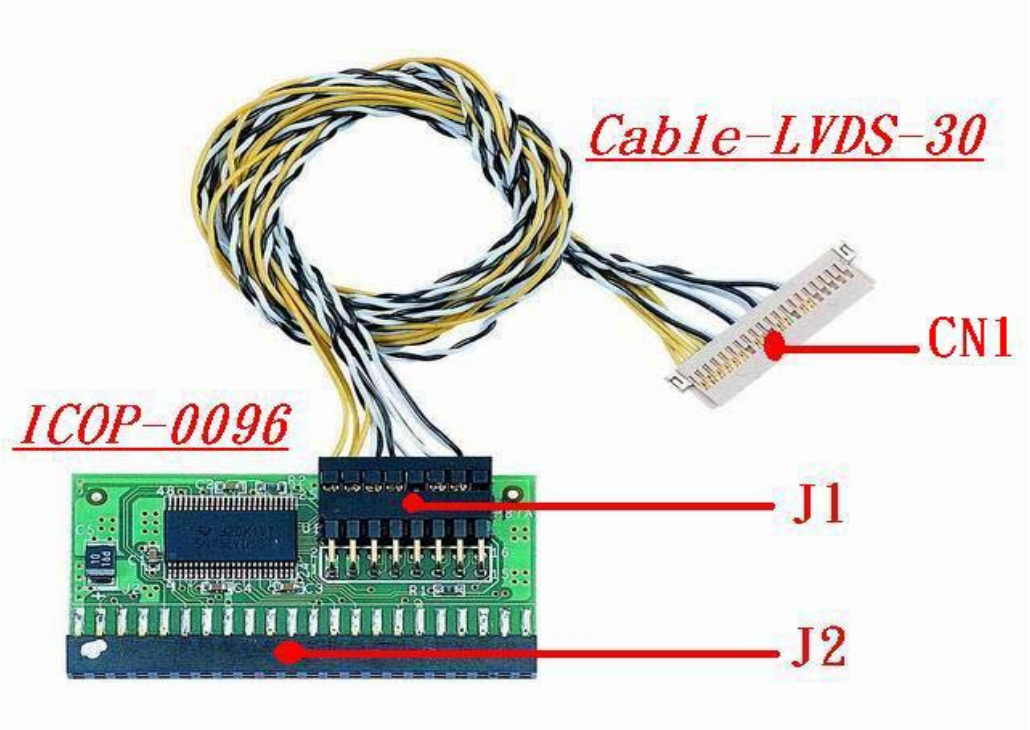

Approved LVDS Flat Panel List

Size	Brand	Resolution	Model No.
3.5”	PVI	640x480	PD035VL1
5”	PVI	640x480	PD050VL1
6.5”	AUO	640x480	G065VN01
8.4”	AUO	800x600	G084SN03
8.9”	AUO	1024x600	A089SW01
8.9”	CPT	1024x600	CLAA089NA0ACW
10.4”	AUO	800x600	G104SN02
12.1”	AUO	800x600	G121SN01
15”	AUO	1024x768	G150XG01

D. Flat Panel Wiring and Lighting

■ Hardware

Before you connect the TFT LCD Flat Panel with Vortex86DX-6318, please make sure that the input Voltage of LCD is 3.3V or Not

■ BIOS

Please contact or e-mail our regional sales to get the special BIOS for any TFT LCD Flat Panels.

■ Wiring LCD Cable

Please refer to Page 14 (J24: LCD connector) and Page 25~29. Or for more LCD lighting and integration service, please contact our regional sales or mail to info@icop.com.tw ,if you have any questions.

E. TCP/IP library for DOS real mode

DSock is a TCP/IP library for DOS real mode, which is used by RSIP. It provides simple C functions for programmer to write Internet applications. ICOP also provide Internet examples using DSock: BOOTP/DHCP, FTP server, SMTP client/server, HTTP server, TELNET server, Talk client/server, etc.

DSock provides a lot of example source code. Programmer can add Internet functions to their project easily and save development time. With a utility "MakeROM", programmer also can make a ROM image to fit their application, those examples can be seen in the following Application systems: Mity-Mite Serial Server, Web Camera Tiny Server and RSIP Serial Server.

DSock is free for All ICOP products using M6117D/Vortex86/Vortex86SX/Vortex86DX CPU and ICOP also provide the business version of DSock for those customers who are using other x86 CPUs.
If you would like to use DSock or business version of DSock, Please mail to info@icop.com.tw or contact your regional sales.

Please download the trial DSock software and Utilities from our website:
http://www.dmp.com.tw/tech/dmp-lib/dsock/

F. BIOS Default setting

If the system cannot be booted after BIOS changes are made, Please follow below procedures in order to restore the CMOS as default setting.

- Press “End” Key, when the power on

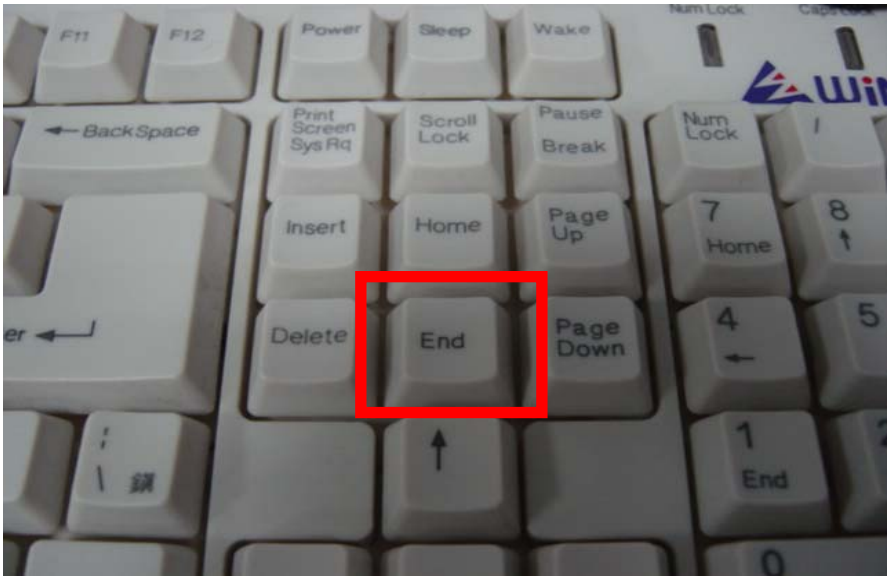

- Press <Del> to enter the AMI BIOS setup
- Press “F9” to Load Optimized Defaults
- Press “F10” to Save configuration changes and exit setup

Warranty

This product is warranted to be in good working order for a period of one year from the date of purchase. Should this product fail to be in good working order at any time during this period, we will, at our option, replace or repair it at no additional charge except as set forth in the following terms. This warranty does not apply to products damaged by misuse, modifications, accident or disaster. Vendor assumes no liability for any damages, lost profits, lost savings or any other incidental or consequential damage resulting from the use, misuse of, originality to use this product. Vendor will not be liable for any claim made by any other related party. Return authorization must be obtained from the vendor before returned merchandise will be accepted. Authorization can be obtained by calling or faxing the vendor and requesting a Return Merchandise Authorization (RMA) number. Returned goods should always be accompanied by a clear problem description.